MODEL: P6030E75B* L/R

BARRIER FREE

*ALL ACCESSORIES OPTIONAL

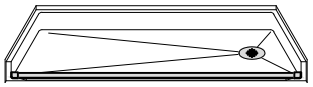

PERSPECTIVE VIEW - N.T.S.
MODEL SHOWN HERE AS:
RIGHT DRAIN

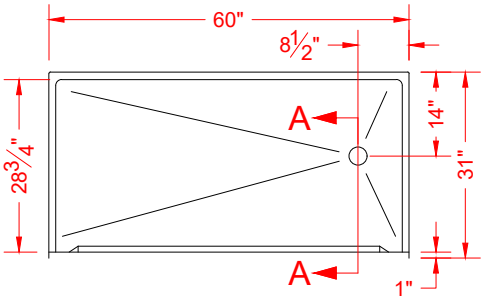

TOP VIEW - SCALE ⅜" = 1'-0"

SEE OVER

Features:

-Molded, one-piece gelcoat/fiberglass shower pan
-Available in various Threshold heights
-On all threshold heights 1-1/4" or shorter, no mud set is required and an anchoring adhesive kit is supplied
-On all threshold heights 1-1/2" or taller, no mud set is required

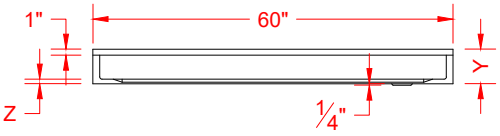

FRONT ELEVATION - SCALE: ⅜" = 1'-0"

***OTHER THRESHOLD HEIGHTS AVAILABLE UPON REQUEST**

MODEL #	UNIT HEIGHT Y	THRESHOLD HEIGHT Z*
P6030E75B	5-3/4"	3/4" MIN
P6030E2B	7"	2" MAX

*** - SEE BACK FOR DETAIL SECTIONS**

PRODUCT SPECIFICATIONS:

-Single-piece shower pan shall be constructed of gelcoat/fiberglass
-Rough-In: Stud opening +1/4" -0" Nominal Dimensions.

C.S.I. FORMAT SPECIFICATION TEXT AVAILABLE

PRODUCT INFORMATION:

-Colors: White as standard, others to match any major fixture manufacturer, also available with sprayable solid surface in many colors

OPTIONAL ACCESSORIES:

INSTALLED BY OTHERS:
-T-Shaped rubber WaterStopper kit
-Semi-permanent threshold adapter
-No-caulk brass drain

CODES:

Designed and manufactured in compliance with the following standards and codes:
-ANSI Z124.2 Standards for Plastic Showers
-UPC / IPC compliant when in accordance with Section 408.6 (UPC, 2021)

NOTICE OF LIMITATION:

-Adhere to floor as required
-Not I.P.C. International Plumbing Code & U.P.C. Uniform Plumbing Code for new construction

bestbath Intelligent Designs

We reserve the right to make revisions without notice in the design of fixtures or in packaging unless this right has specifically been waived at the time the order is accepted.

☐ P6030E75B L/R

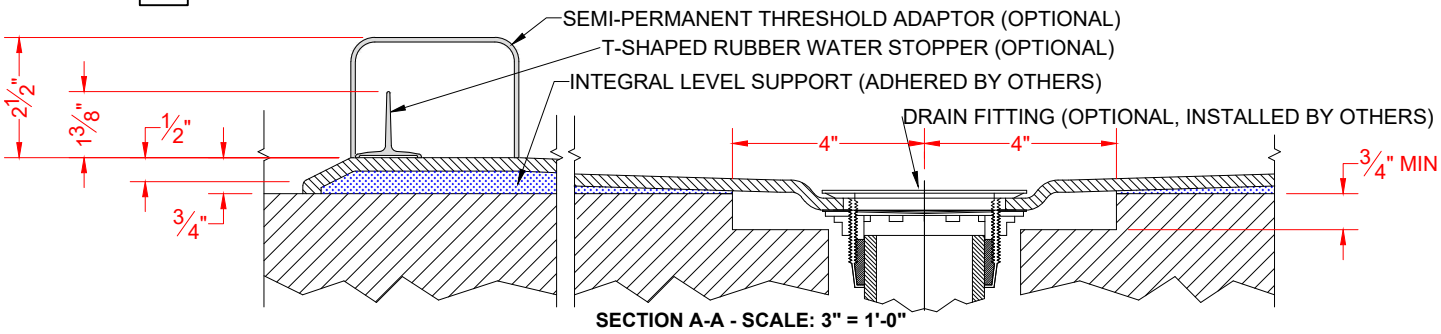

SECTION A-A - SCALE: 3" = 1'-0"

☐ P6030E2B L/R

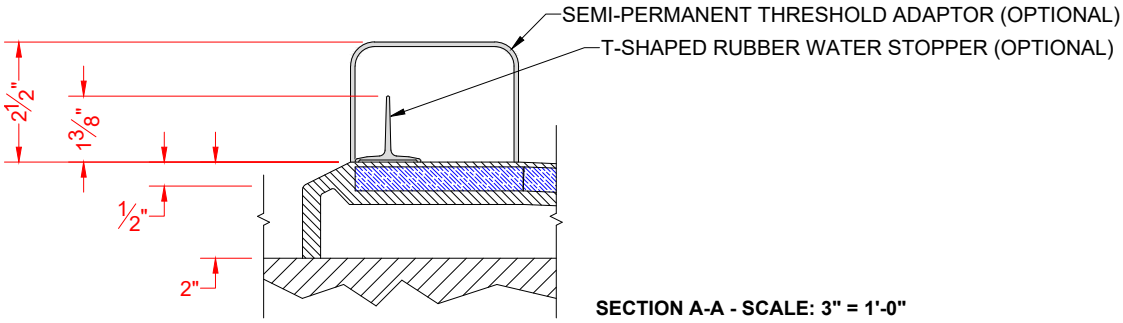

SECTION A-A - SCALE: 3" = 1'-0"

****OTHER THRESHOLD HEIGHTS AVAILABLE UPON REQUEST****